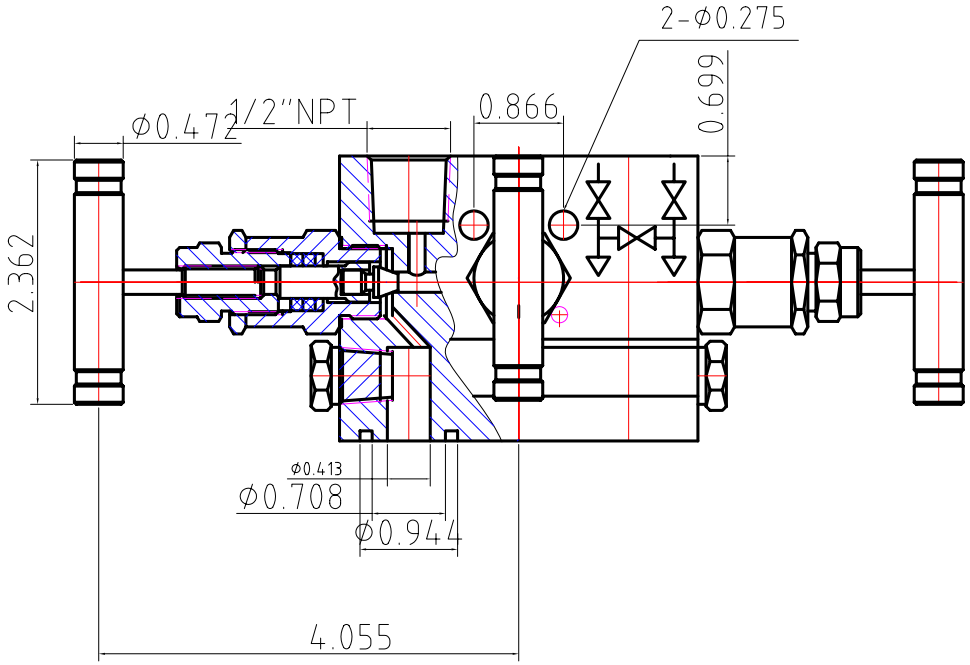

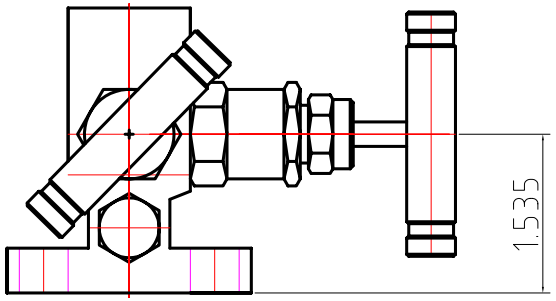

Specification	
Nominal Pressure	6000PSI
Shell Test Pressure	9000PSI
Seat Test Pressure	0.6MPa

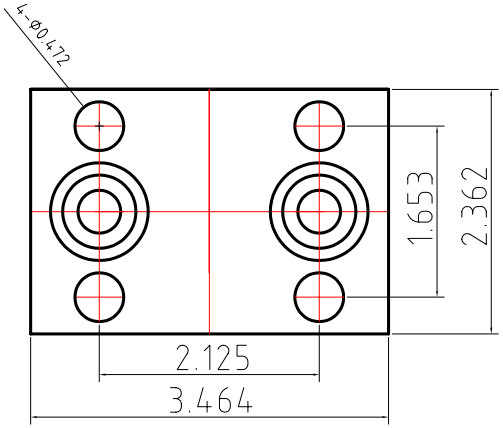

Name	Material	
Hand wheel	304	A105
Packing	SF	SF
Disc	1Cr13	1Cr13
Body	316	A105
Seat	316	A105

COP
3WSSMVFL8FV
3WCSMVFL8FV